# Intro
# IN-TO1

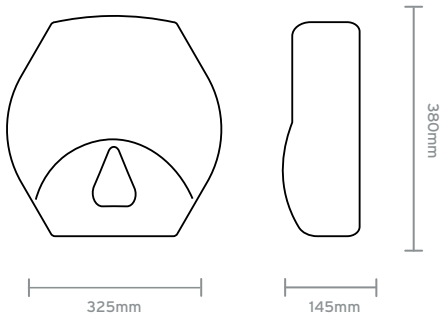




## Production and sales range

| Part numbers | Description | Components |
|---|---|---|
| IN-TO1/WS | Maxi toilet paper dispenser | |
| IN-TO1/WR5 | Maxi toilet paper dispenser with reduction 0F171 | |
| IN-TO1/WR7 | Maxi toilet paper dispenser with reduction 0F288 | |

## Accessories and spare parts


N0120


00025


03D52


1V123


N0202


0F288


0F171


N1510/KIT-100
(100 keys)


N1510/KIT-1K
(1000 keys)

## Packaging Information

Rif.so MSP P1

| Item | Dimen. | Weight (Gr) | Code Material | % Pack |
|---|---|---|---|---|
|  Cardboard | L: 33cm<br>W: 15,5cm<br>A: 39,5cm | 228 | PAP20 | 83% |
| 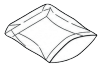 Item Bag | L: 55cm<br>W: 70cm | 21 | LDPE04 | 7% |
|  Screw Pack | L: 13cm<br>W: 13cm | 19 | LDPE04 | 7% |
|  Adhesive | Not Applicable | 2 | PPL | 1% |
|   Label | L: 13cm<br>W: 11cm | 2 | PAP22 | 1% |
| 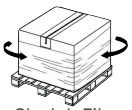 Stretch Film | Not Applicable | 3 | LDPE04 | 1% |

## Technical specifications

| | |
|---|---|
| **Materials** | White ABS cover and back |
| **Weight** | 1,0kg |
| **Consumables** | Maxi toilet paper |
| **Capacity** | Roll max 30cm D max 10cm core min 4,2cm<br>With reduction 0F171 core min 5,5cm<br>With reduction 0F288 core min 7cm |
| **Shot size** | |
| **Activation** | |
| **Viscosity** | |
| **Chemicals data** | |
| **Branding** | |
| **Recomm. install. height** (from floor to dispenser bottom): 70cm | |

## Shipping informations - Tariff number :

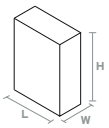


**Single box**
Quantity of units: 1
Length: 33cm
Width: 15,5cm
Height: 39,5cm
Net weight: 1,0Kg
Gross weight:1,3Kg

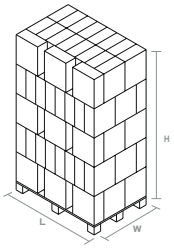


**Euro pallet**
Quantity of units: 95 pz
Length: 120cm
Width: 80cm
Height: 210cm
Net weight: 95Kg
Gross weight: 130Kg

**UK pallet**
Quantity of units:
Length:
Width:
Height:
Net weight:
Gross weight:

Note:To ensure maximum compatibility and performance between our product and yours, a thorough evaluation is required. Our team is fully equipped and trained to provide the necessary assistance, including rigorous specific testing.

**Your dispenser, your way**
Our product ranges include custom design options to make them unique to your brand.

**Phone:** UK +44 (0) 1273 049 722 / IT +39 0284293500
**Mail:** sales@hylabdispensers.com
**www:** hylabdispensers.com

# Intro IN-TO2

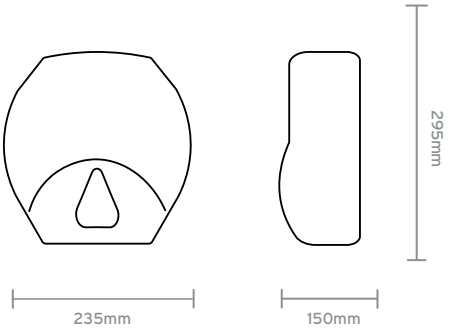




## Production and sales range

| Part numbers | Description | Components |
|---|---|---|
| IN-TO2/WS | Mini toilet paper dispenser | |
| IN-TO2/WR5 | Mini toilet paper dispenser with reduction 0F171 | |
| IN-TO2/WR7 | Mini toilet paper dispenser with reduction 0F288 | |

## Accessories and spare parts


N0121


00025


03D52


1V123


0V347


0F288


0F171

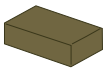
N1510/KIT-100
(100 keys)

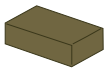
N1510/KIT-1K
(1000 keys)

## Packaging Information

### Rif.so MSP P1

| Item | Dimen. | Weight (Gr) | Code Material | % Pack |
|---|---|---|---|---|
| Cardboard | L: 23,5cm<br>W: 15cm<br>A: 29,5cm | 132 | PAP20 | 76% |
| Item Bag | L: 42cm<br>W: 60cm | 15 | LDPE04 | 9% |
| Screw Pack | L: 13cm<br>W: 13cm | 19 | LDPE04 | 11% |
| Adhesive | Not Applicable | 2 | PPL | 1% |
| Label | L: 13cm<br>W: 11cm | 2 | PAP22 | 1% |
| Stretch Film | Not Applicable | 3 | LDPE04 | 2% |

## Technical specifications

| | |
|---|---|
| **Materials** | White ABS cover and back |
| **Weight** | 0,59kg |
| **Consumables** | Mini toilet paper |
| **Capacity** | Roll max 20cm D max 10cm core min 4,2cm<br>With reduction 0F171 core min 5,5cm<br>With reduction 0F288 core min 7cm |
| **Shot size** | |
| **Activation** | |
| **Viscosity** | |
| **Chemicals data** | |
| **Branding** | |
| **Recomm. install. height** (from floor to dispenser bottom): 70cm | |

## Shipping informations - Tariff number :

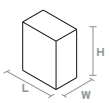


**Single box**
Quantity of units: 1
Length: 23,5cm
Width: 15cm
Height: 29,5cm
Net weight: 0,59Kg
Gross weight:0,7Kg

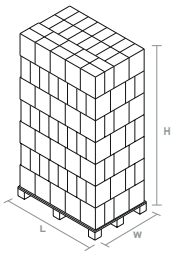


**Euro pallet**
Quantity of units: 182 pz
Length: 120cm
Width: 80cm
Height: 215cm
Net weight: 107Kg
Gross weight: 145Kg

**UK pallet**
Quantity of units:
Length:
Width:
Height:
Net weight:
Gross weight:

Note:To ensure maximum compatibility and performance between our product and yours, a thorough evaluation is required. Our team is fully equipped and trained to provide the necessary assistance, including rigorous specific testing.

**Your dispenser, your way**
Our product ranges include custom design options to make them unique to your brand.

**Phone:** UK +44 (0) 1273 049 722 / IT +39 0284293500
**Mail:** sales@hylabdispensers.com
**www:** hylabdispensers.com