Intro
IN-FO1

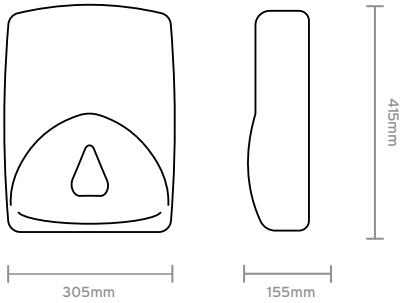



Production and sales range

Part numbers	Description	Components
IN-FO1/WS	Maxi multifolder towel dispenser	
IN-FO1/WRN	Maxi multifolder towel dispenser with ajustable FAA	

Technical specifications

Materials	White ABS cover and back
Weight	1,04kg
Consumables	V-Folded interleaved hand towel Interleaved hand towel
Capacity	500 towels L max 26cm D max 10.5cm
Shot size	
Activation	
Viscosity	
Chemicals data	
Branding	
Recomm. install. height	(from floor to dispenser bottom): 140cm

Accessories and spare parts


0571J

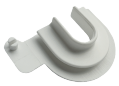
0570J


1V123


0V347


N0120


03D52


N1510/KIT-100
(100 keys)


N1510/KIT-1K
(1000 keys)

Packaging Information

Rif.so MSP P1

Item	Dimen.	Weight (Gr)	Code Material	% Pack
 Cardboard	L: 31,5cm W: 17cm A: 43cm	223	PAP20	84%
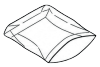 Item Bag	L: 42cm W: 60cm	15	LDPE04	6%
 Screw Pack	L: 13cm W: 13cm	19	LDPE04	7%
 Adhesive	Not Applicable	2	PPL	1%
 Label	L: 13cm W: 11cm	2	PAP22	1%
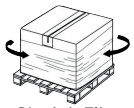 Stretch Film	Not Applicable	3	LDPE04	1%

Shipping informations - Tariff number :

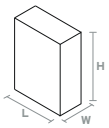

Single box
Quantity of units: 1
Length: 31,5cm
Width: 17cm
Height: 43cm
Net weight: 1,04Kg
Gross weight:1,3Kg

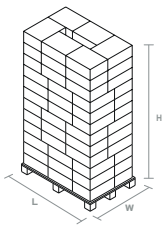

Euro pallet
Quantity of units: 72 pz
Length: 120cm
Width: 80cm
Height: 215cm
Net weight: 93Kg
Gross weight: 115Kg

UK pallet
Quantity of units:
Length:
Width:
Height:
Net weight:
Gross weight:

Note:To ensure maximum compatibility and performance between our product and yours, a thorough evaluation is required. Our team is fully equipped and trained to provide the necessary assistance, including rigorous specific testing.

Your dispenser, your way
Our product ranges include custom design options to make them unique to your brand.

Phone: UK +44 (0) 1273 049 722 / IT +39 0284293500
Mail: sales@hylabdispensers.com
www: hylabdispensers.com

Intro IN-FO2

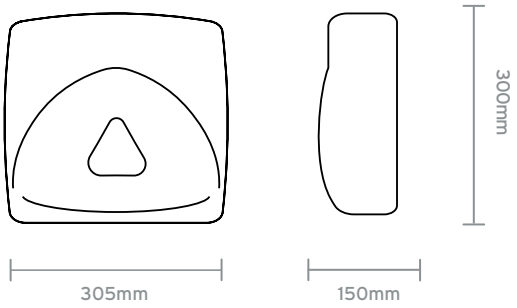



Production and sales range

Part numbers	Description	Components
IN-FO2/WS	Midi multifolder towel dispenser	
IN-FO2/WRN	Midi multifolder towel dispenser with ajustable FAA	

Accessories and spare parts


0571J

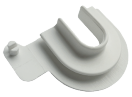
0570J


1V123


0V347


N0120


03D52

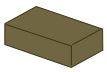
N1510/KIT-100 (100 keys)

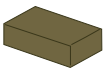
N1510/KIT-1K (1000 keys)

Packaging Information

Rif.so MSP P1

Item	Dimen.	Weight (Gr)	Code Material	% Pack
 Cardboard	L: 31,5cm W: 16cm A: 31,5cm	187	PAP20	82%
 Item Bag	L: 42cm W: 60cm	15	LDPE04	7%
 Screw Pack	L: 13cm W: 13cm	19	LDPE04	8%
 Adhesive	Not Applicable	2	PPL	1%
 Label	L: 13cm W: 11cm	2	PAP22	1%
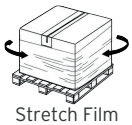 Stretch Film	Not Applicable	3	LDPE04	1%

Technical specifications

Materials	White ABS cover and back
Weight	0,81kg
Consumables	V-Folded interleaved hand towel Interleaved hand towel
Capacity	300 towels L max 26cm D max 10.5cm
Shot size	
Activation	
Viscosity	
Chemicals data	
Branding	
Recomm. install. height	(from floor to dispenser bottom): 140cm

Shipping informations - Tariff number :

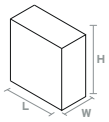

Single box
Quantity of units: 1
Length: 31,5cm
Width: 16cm
Height: 31,5cm
Net weight: 0,81Kg
Gross weight:0,9Kg

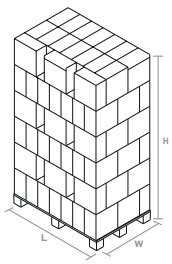

Euro pallet
Quantity of units: 72 pz
Length: 120cm
Width: 80cm
Height: 205cm
Net weight: 85Kg
Gross weight: 115Kg

UK pallet
Quantity of units:
Length:
Width:
Height:
Net weight:
Gross weight:

Note:To ensure maximum compatibility and performance between our product and yours, a thorough evaluation is required. Our team is fully equipped and trained to provide the necessary assistance, including rigorous specific testing.

Your dispenser, your way
Our product ranges include custom design options to make them unique to your brand.

Phone: UK +44 (0) 1273 049 722 / IT +39 0284293500
Mail: sales@hylabdispensers.com
www: hylabdispensers.com

Intro
IN-FO3

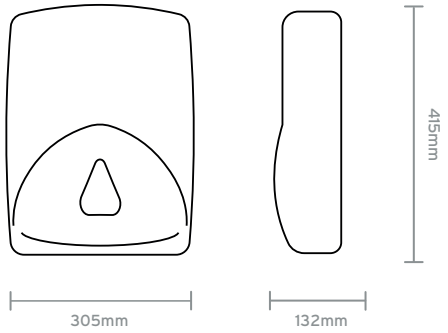



Production and sales range

Part numbers	Description	Components
IN-FO3/WS	Slim multifolder towel dispenser	
IN-FO3/WRN	Slim multifolder towel dispenser with ajustable FAA	

Accessories and spare parts


0571J

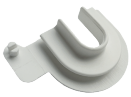
0570J


1V123


0V347


N0120


03D52

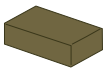
N1510/KIT-100 (100 keys)

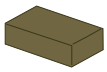
N1510/KIT-1K (1000 keys)

Packaging Information

Rif.so MSP P1

Item	Dimen.	Weight (Gr)	Code Material	% Pack
Cardboard	L: 31cm W: 14,5cm A: 43cm	200	PAP20	83%
Item Bag	L: 42m W: 60cm	15	LDPE04	6%
Screw Pack	L: 13cm W: 13cm	19	LDPE04	8%
Adhesive	Not Applicable	2	PPL	1%
Label (Hylab)	L: 13cm W: 11cm	2	PAP22	1%
Stretch Film	Not Applicable	3	LDPE04	1%

Technical specifications

Materials	White ABS cover and back
Weight	1,06kg
Consumables	Slim interleaved hand towel
Capacity	500 towels L max 26cm D max 8,5cm
Shot size	
Activation	
Viscosity	
Chemicals data	
Branding	
Recomm. install. height	(from floor to dispenser bottom): 140cm

Shipping informations - Tariff number :

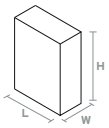

Single box
Quantity of units: 1
Length: 31cm
Width: 14,5cm
Height: 43cm
Net weight: 1,06Kg
Gross weight:1,1Kg

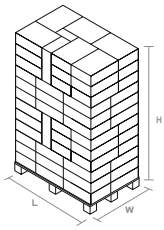

Euro pallet
Quantity of units: 76 pz
Length: 120cm
Width: 80cm
Height: 185cm
Net weight: 80Kg
Gross weight: 95Kg

UK pallet
Quantity of units:
Length:
Width:
Height:
Net weight:
Gross weight:

Note:To ensure maximum compatibility and performance between our product and yours, a thorough evaluation is required. Our team is fully equipped and trained to provide the necessary assistance, including rigorous specific testing.

Your dispenser, your way
Our product ranges include custom design options to make them unique to your brand.

Phone: UK +44 (0) 1273 049 722 / IT +39 0284293500
Mail: sales@hylabdispensers.com
www: hylabdispensers.com